John Thompson

The Reaction Research Society

BEGINNING SOLID PROPELLANT ROCKET PROPULSION COURSE

Revision 2
29 February, 2000

Reaction Research Society, Inc.
P.O. Box 90306, World Way Postal Center
Los Angeles, CA 90009

Steve Bartlett

Steve Bruchman

Jim Chabill

Neil Roth Max

Hicks

Fred Nagy

Nick E Georgy

Tony Bibbel

Steve E John

Joe Guy

Nick Andersen

Jerry Hancock

ACKNOWLEDGMENT

The Reaction Research Society gratefully acknowledges the contributions of many members made in the preparation of this document and the propulsion course it accompanies. This work in the field of amateur experimental rocketry is unique and stands as a bright example of inventiveness, dedication, and excellence.

Niels Anderson
George Dosa
Brian Wherley
Robert Dahlquist
Randy Thompson
George Garboden
John Rahkonen
Thomas Mueller
Lawrence Teebken
David Crisalli

Mr. George Dosa

The propulsion class you are about to begin is the first "hands on" amateur experimental rocket course ever offered, to our knowledge, anywhere in the United States. This type of historical first should not be allowed to pass without some attention being drawn to its significance, both for what it is and for the people who have made it possible. There are not many locations around the world where, for either political or geographic reasons, private individuals can organize themselves into groups whose primary interest is designing, building, and testing large rockets.

Since the days of Dr. Robert Goddard, the United States has always had its share of rocket enthusiasts and experimentalists. In 1943, even before the end of the Second World War, the young students who founded the Reaction Research Society were hard at work experimenting with propulsion systems. As the "Space Age" dawned, the imaginations of millions were fired with the possibility of flight beyond the atmosphere of Earth. But to members of the many amateur rocketry groups forming during those days, flights of the imagination were not enough. Those with the interest, drive, and courage to try, designed and built fantastic rockets that exploded out of their launch towers on towering pillars of fire and smoke. These were not cardboard models with minuscule motors producing ounces of thrust. These were thundering metal machines, many feet long, producing thousands of pounds of thrust, and flying into the clear desert skies at unbelievable speeds.

It was a great time of advancement, adventure, and experimentation. Some of those who built these great, unforgiving machines also became the mentors for hundreds of others who followed. These special few not only pursued their own projects, but stopped to share what they had learned with others. Guiding, advising, encouraging, they were tireless in their belief that there was much to be learned in the pursuit of amateur rocketry and they helped all who came and asked. Amateur rocketry, as a whole, owes a debt of gratitude to the few who trained and directed those of us too young and full of wild enthusiasm for our own good. They taught us many things, fed our enthusiasm for

learning, encouraged us through failures, and kept us safe all the while with their knowledge and experience.

This course is dedicated to one such man, Mr. George Dosa. George has been an active rocket propulsion experimentalist for many years. In many ways, he can truly be considered one of the founding fathers of experimental rocketry. George Dosa was the state of California's first licensed solid propellant rocket pyrotechnic operator. He has been the back bone of the Reaction Research Society for the last 38 years and still serves today as the Director of Research for the RRS.

George has dedicated his life to the continuance, advancement and testing of experimental rocket propulsion systems. He represents the very essence of the golden years of experimental rocketry and has crusaded to preserve the right of new experimenters to follow this fascinating and technical hobby. Giving generously of his own time, he has contributed greatly to the education and encouragement of others. As a consequence, the Reaction Research Society would like to thank George by dedicating this first in a series of amateur rocketry propulsion classes to him personally and to his efforts in behalf of amateur rocketry over the years.

Niels Anderson
David Crisalli

March, 1996

Introduction

Thousands of people around the country, and in many foreign countries, are involved in the hobby of rocketry. The term "rocketry", however, covers a diverse spectrum from the Estes type model rockets at one end to the field you are about to enter, Amateur Experimental Rocketry. High Power Rocketry is often confused with Amateur Experimental Rocketry because of the size of the rockets built and flown under that title. Nonetheless, there is a huge distinction between Model / High Power Rocketry and the Amateur Experimental Rocketry work you are beginning or refining by taking this course. Before we proceed further, some definitions are in order.

In the area of model and high power rockets, ALL propulsive hardware (motors) are commercially produced, whether solid propellant or hybrid devices. The individuals involved with model or high power rocketry are end users of these devices, but do not design or build these propulsion systems themselves. They do not fabricate motor components, mix solid propellants, tailor burning rates, adjust chamber pressure characteristics, design liquid propellant feed systems, conduct blow down testing, or flow calibrate liquid rocket injectors. They very seldom ever static test a motor and, when they do, the engine is hardly ever instrumented to collect quantitative data. They are primarily interested in flying rockets and, therefore, the rocket structures, aerodynamics, and on board systems are their primary concern. They use commercially manufactured, "slide in" motors to propel these vehicles, but are not involved with designing or building propulsion systems.

Amateur Experimental rocketry is almost the converse. In this arena, the design, fabrication, and test of the propulsion system itself is the main goal. Solid propellant, liquid bipropellant , liquid monopropellant , and hybrid engine systems up to 15,000 pounds of thrust (1,000,000 Newton-seconds) have been built by RRS members. Individuals pursuing this type of rocketry calculate DeLaval nozzle throat areas, injector mass fluxes, feed system pressure drops, combustion efficiency, combustion stability, and specific impulse, to touch on just a few of the technical issues addressed. They design and build a complex variety of stationary test equipment with which to study these engine systems including test stands, reinforced concrete bunkers, and blockhouses. Their efforts are directed at hard engineering, fabrication processes, structural and thermal analysis, and a host of other technical aspects of propulsion. Most of their activity centers around the static testing of these propulsion systems to determine functionality and combustion performance. Once in a while they even fly a rocket with one of these propulsion systems installed.

To be more succinct, high power and model rocketry involves flying small to fairly large cardboard (or similar light material rockets) with prepackaged motors. These rockets are flown routinely in any large, open area approved by the FAA and local fire authority with no special fixed installations or protection for spectators. Amateur experimental rocketry involves building the rocket motors themselves, some of which are more than an order of magnitude larger than the largest high power motors. The testing of these systems, whether static or flight, is never conducted without very sophisticated equipment, specialized knowledge, and fixed installations for the protection of test crews and spectators. When these systems are flown, the vehicles are constructed almost entirely of metal and contain enough energy to be very lethal. It follows then that Amateur Experimental Rocketry requires a completely different set of rules concerning normal operations and the safety of those involved. And safety has always been heavily dependent on the knowledge of those involved.

The Reaction Research Society's experimental propulsion courses were conceived by Niels Anderson to fill a void in the amateur experimental rocket community. That void has been the formalized transfer of knowledge and experience to the interested student. In the past, instruction has always been through an informal sort of voluntary apprenticeship. While this method has its advantages, it is slow in transferring basic concepts and does not always efficiently cover all the required information.

Around 1993, George Garboden and Niels Anderson started a joint project to create a composite rocket motor that would serve as a relatively simple, standard composite flight vehicle, much as the existing "Beta" has become the standard micrograin (zinc/sulfur) rocket. As part of that effort, the motor design, propellant processing procedures, specialized equipment, and testing methodology were established. In addition, the infrastructure was established to transport all of the required materials and equipment to the RRS's Mojave test range for mixing, casting, curing and hot fire testing. After the initial success of these motors during static and flight testing conducted in 1994, the idea was put forth to use this type of motor as a tool to formally teach a course in composite propellants. As a corollary, small liquid and hybrid motors that have previously been successfully demonstrated could also be used to teach the fundamentals of those types of propulsion.

The decision was made by the RRS Executive Council to proceed with this first propulsion course using the newly developed composite motor. To provide the most comprehensive course possible, individuals within the RRS were selected as instructors for their specific experimental propulsion expertise. The individual instructors wrote and developed the material being presented here. The information presented in this class is, by no means, an exhaustive study of composite propellant rocket propulsion. Rather, it was selected as a representative specific design discussion that would allow the instructors a method to transfer the maximum amount of useful information in the minimum amount of class and field time. The instructors have done their best, and have spent a great deal of their time (all volunteer), to design this course with that goal in mind. That being said, they are anxious to receive feedback from the students about improvements that might be made. If you have any such suggestions during (or by the end) of this course, please do not hesitate to share them with the instructors. We are dedicated to improving and updating this class at every opportunity.

This course would never have materialized unless members like you contributed their time and energies. Since you are all now members of the RRS, it would be greatly appreciated if you would continue to contribute any additional material that you think would complement the Society's courses. We encourage all members to get involved in supporting the Society's efforts to improve its capabilities and training for those interested in learning more about propulsion. The Reaction Research Society is one of the few remaining (and oldest continuously active) experimental rocket groups in the world. The Society is interested in doing everything it can to expand its capabilities, improve its technical expertise, and continue to provide the opportunity for anyone interested to conduct meaningful rocket propulsion experimentation. We intend to do this through improving our facilities and offering courses such as this one.

TABLE OF CONTENTS

I. Safety

- General Desert Safety, Safety Equipment, Safety Rules for Propellant Handling and Motor Testing

II. Basic Solid Rocket Design Considerations

- Thrust level, Performance, Burn Duration, Weight, Size
- Motor Case, Nozzle, Bulkhead, Retainers, Seals, Insulators, Igniters, Grain Geometry
- Motor Design Software - Grain Configuration, Burn Back Simulation

III. Engine Hardware Drawings

IV. Propellant

- Oxidizers, Fuels, Additives
- Grain Types
- Characteristics - Viscosity, Solids Loading, Additives, Curing, Opacifiers, Aluminizing, AP Crystal Size Effects

V. Ignition

- Materials, Pressure, Energy Release, Flame Dispersion, Duration, Shock Wave Dispersion, Heat Flux
- Compounds, Compounding
- Sample Calculations

VI. Propellant Mixing, Casting, Curing, and Finishing

- General Information
- Mixing - Mechanical (Planetary), Manual, Equipment
- Casting Technique for Class Propellant
- Curing - Temperature Effects, Elevated Temperature Cure
- Detailed Mixing Procedures for Class Propellant
- Propellant Finishing - Brushing, Sanding, Inhibiting

VII. Static Testing

- Data Acquisition
- Instrumentation
- Data Recording on Computer
- Data Accuracy, Calibration
- Data Reduction, Test Documentation

VIII. Appendices

SAFETY

by
David E. Crisalli
Pyrotechnic Operator, First Class
Reaction Research Society, Inc.

INTRODUCTION

The Reaction Research Society has been conducting amateur experimental rocket testing for 53 years (as of this writing) without a single accident that has led to any sort of injury. All types of liquid, solid, and hybrid propulsion systems have been built and fired from very small devices to motors producing thousands of pounds of thrust and burning hundreds of pounds of high energy propellants. All of these were built by inquisitive experimentalists trying to accomplish complicated engineering goals by simple and inexpensive means. While many have been successful, this does not mean that there have not been a few failures along the way. RRS members have had their rockets burst, explode, burn, corkscrew, crash, detonate, melt down, and fizzle on occasion. Many rockets over the years, using these several techniques, have experienced what we like to refer to as a "RUD". That is, a "Rapid Unscheduled Disassembly".

Some of these failures have been more benign than others, but none have ever resulted in anyone being hurt. The reason behind this enviable safety record has been that all rocket testing is conducted with extensive and proper precautions. The use of segregated fueling areas, concrete blockhouses, and reinforced bunkers provides adequate protection for personnel. In addition, whether large or small, rocket propulsion systems are always treated with the respect they deserve during RRS testing evolutions. The experience of the pyrotechnic operators who oversee these operations, in conjunction with long established procedures for propellant handling, motor arming, firing, and safing, have ensured that this type of work is carried out safely and efficiently.

In addition to the specific safety procedures followed for rocket test operations, the desert environment itself can be hostile and unforgiving. A few simple precautions will insure that outings to the Mojave Test Area (MTA) are enjoyable and productive.

GENERAL DESERT SAFETY

The RRS's Mojave Test Area is located in an isolated spot to the east of the Koehn Dry Lake near the "town" of Cantil about 30 miles north east of the town of Mojave. The area is entirely dry, isolated, desert terrain for miles in all directions. The primary safety rule to follow in an area such as this is to be as completely self sufficient as possible. It is a long way to get help and, while we rely heavily on one another out at the test site, we are all collectively better prepared for any emergency when we are all self reliant. So bring everything you think you will need for both normal circumstances and emergencies. Then bring a little extra to share if the need arises.

The desert is a harsh and unpredictable environment almost any time of the year. Flash floods and sudden desert thunderstorms can occur at any time. From March through November, rattle snakes are fairly plentiful. Do not put your hands or feet anywhere you

can not see and make a fair amount of noise as you move about. The snakes are more afraid of an encounter than you are and will vacate the area if you do not surprise them. Black widows are also very plentiful throughout most of the year, and they do not hear very well. The trick about making noise that works with the snakes will not work with the black widows, so keep a sharp eye out.

It is usually cold at night and in the morning and hot during most of the day. At times, the winds can be very severe driving clouds of dirt and sand across the desert. If you wear contact lenses, you should be aware of this and take the appropriate precautions. It has snowed on us in the winter and summer temperatures have reached over 120 degrees. Bring substantial, comfortable shoes, a jacket, a change of clothes, and a sun hat. Sunglasses and sun screen are also highly recommended. **Food and water are essentials.** Bring at least one gallon of water for each person per day. Food should be prepared picnic style for convenience and coolers with plenty of ice are worth the trouble to prepare and haul. Although it is only 30 miles back into town, unexpected car trouble, flash floods that wash out roads, and a host of other unexpected events can alter plans. Having food and water available can be extremely comforting and useful.

GENERAL OPERATIONS SAFETY

The basic premise on which an injury-free amateur (or for that matter, professional) rocket career is built is that **ALL INJURIES ARE PREVENTABLE.** By adopting this attitude you will be well on your way to ensuring your personal safety as well as that of others. It is important that you regard safety as your number one priority. The solid propellants used in this course contain considerable energy and always deserve your undivided attention and respect.

Knowledge - Knowing what materials you are dealing with, their properties and inherent hazards, and knowing as much as possible how the process you want to undertake will affect the materials you are using is extremely important in avoiding accident and injury. In solid propellant motor manufacturing, propellant ingredients will be poured, weighed, mixed in an electric mixer, cast into solid propellant grains, cured at elevated temperature, machined to final dimensions, assembled into a motor case and finally test fired. These are all individual processes, each with inherent hazards from dust inhalation to the potential for explosion. Identifying the potential hazards ahead of time allows you to avoid them or minimize your exposure.

Engineering Controls - The second way to prevent injury is to eliminate exposure to hazards by proper use of what are known as engineering controls. Engineering controls refer to use of proper equipment and processes to minimize the likelihood that a mishap will occur. For example, premixing all of the solids **except** the oxidizer into the liquid binder allows you get a thorough and consistent mix without exposing yourself to reactive material. By premixing, the final mixing process that incorporates the oxidizer can be done quickly without your direct supervision and without sacrificing quality. The mixer can be started and stopped remotely. Mixing time and scraping down of the mixing vessel is kept to a minimum, so your processing and handling of the propellant is minimized. Include remote control wherever possible so that you are not around to be injured should an accident occur. (The equipment can always be replaced). Remote operation can be as simple as turning the mixer on and off by plugging in or unplugging an extension cord.

Written Procedures - The third line of defense in avoiding injury is through the proper use of procedures. A procedure is a written set of instructions that you will use to direct your activities. Procedures are used in addition to engineering controls to mitigate hazards

by eliminating mistakes and minimizing your exposure to dangerous materials or operations. During the testing of the solid motors assembled during this course, for example, a written procedure will be followed for installing the igniter into the loaded motor that requires all nonessential personnel (anyone other than the student and the Pyro-Op) be clear of the test stand. The igniter is then installed and the engine placed in the test stand. Next, it is verified that the leads to the firing circuit are disconnected and shunted at the blockhouse control panel before the igniter leads are connected at the motor. By following this procedure, no more people are exposed to the loaded motor than is absolutely necessary and the motor cannot be connected inadvertently to an energized firing circuit. By having the procedures written down as a checklist, it is much less likely that the wrong thing is done or that the right things are done out of proper sequence. Any and all activities will benefit from procedures not only enhancing safety but improving the results of your mixing, testing or whatever.

Personal Protective Equipment - The last line of defense is personal protective equipment. This equipment can include aprons, gloves, goggles, face shields, respirators, grounding straps, blast shields, etc. When engineering controls and procedures cannot completely eliminate exposure to a hazard, personal protective equipment may be required. In the aforementioned example, premixing of all ingredients except the oxidizer was cited as a good way to minimize your exposure to reactive propellant mixtures. To prevent your exposure to the premix compounds, an apron, gloves and face shield will keep chemicals off of skin. Goggles will keep chemicals out of the eyes and a dust mask will keep chemicals out of the lungs. Personal protective equipment is inexpensive and readily available. Get into the habit of using it. It is worth noting that the blockhouse at the Mojave Test Area is a form of personal protective equipment shielding personnel from fragments should a motor case rupture.

PROPELLANT MIXING AND HANDLING SAFETY

Any propellant mixing or handling operation has the potential for hazard. Propellants, by their nature, contain tremendous amounts of chemical energy. While accidents do happen, careful adherence to established procedures will preclude the potential for a mishap. The instructors for this course will show you how to carry out these operations and tasks safely. Pay careful attention to their directions and, if at any time you are unsure of yourself, stop and ask the instructor for help. **Do not guess.**

The instructors will provide you with all the personal protective equipment you will require for propellant processing operations. Face shields, rubber gloves, dust masks, etc., must be worn to be effective and, as mentioned previously, they are your last line of defense if all else fails and something unexpected happens. The Reaction Research Society has never had a propellant or rocket related injury accident in 53 years of rocket testing, and we intend to retain that record and continue to improve upon it. Use the provided safety equipment and pay attention to the instructors at all times.

ROCKET TESTING SAFETY

The safety procedures used by the Society over the years during rocket test operations are straightforward and simple. While there are many such procedures for various types of test evolutions, those major items specifically related to the propellant handling and hot fire testing included as part of this course will be listed here;

ABBREVIATED SAFETY RULES

1. No rocket propellant preparations or test operations will be conducted without a California state licensed pyrotechnic operator of the appropriate rating (Rockets; First or Second Class) present. The Pyro Op will have previously arranged for all necessary Federal, state, and local permits required.

2. The Pyro Op in charge of any given event has absolute authority with respect to safety. Any violations or non-compliance with the directions (pertaining to safety) of the Pyro Op in charge of any particular event, may result in the cessation of all activities and/or the expulsion from the test site of any member not complying with the instructions of the Pyro Op.

3. For the purposes of this class, the authority of any instructor in regards to safety is only subordinate to that of the Pyro Op in charge. Pay careful attention to any directions given by the course instructors.

4. If at any time anyone connected with this course sees an unsafe situation developing, IMMEDIATELY inform the Pyro Op or another instructor and, if prudent, take steps to mitigate the danger.

5. All propellants and loaded rocket motors will be handled with care and respect at all times.

6. Absolutely no alcoholic beverages or other mind altering drugs will be consumed 12 hours before or during this course of instruction.

7. Students will not be allowed to handle any propellants, loaded rocket motors, or ignition devices until shown by an instructor exactly what is required.

8. The Pyro Op will hold a short personnel briefing before the first operation of the day to familiarize everyone present with plan of operations.

9. Fire fighting and first aid equipment will be available during all operations conducted at the Mojave Test Area (MTA).

10. Only the minimum number of personnel required will be involved in any hazardous operations (as determined by the Pyro Op).

11. All personnel will remain as far from loaded rockets and/or propellants as possible unless they are directly involved in handling, arming, setting, or test operations.

12. All personnel will be in protected areas during any test firing. Protected areas include the blockhouse and bunkers. The quonset hut and any other light structures at the MTA (including cars) will be off limits to all personnel during test operations.

13. Loaded rockets will be stored and transported in such a manner as to avoid shock, high ambient temperature, vibration, etc., and will be transported without an igniter installed whenever possible.

14. During propellant loading, the igniter will not be installed until the last possible moment and only under the supervision of the Pyro Op or his appointed assistant.

15. Rocket motors to be tested may not be armed or fired except by the Pyro Op or by an assistant (or trainee) under his direct supervision. The actual arming operation will not be initiated until all personnel, not directly involved with arming, have left the immediate area and have taken cover in the appropriate areas for the firing. Prior to arming any motor, the Pyro Op will insure that the firing circuit is de-energized and shunted by use of a key switch on the firing panel. This firing circuit shall be the sole means of accomplishing ignition of the test article. The Pyro Op shall retain the shunt switch key in his personal possession from the time the firing circuit is initially shunted until the arming operations are completed by using the key to remove the firing shunt. This final arming action will establish a ready firing circuit to the test article.

16. Firing of the test article will be accomplished by the Pyro Op, or his assistant, after the Pyro Op is positive that all personnel at the test site are under cover. The test article will be fired at the end of a countdown of no less than 10 seconds duration by depressing the firing switch. When larger groups of spectators are present, they will be kept apprised of the situation by means of two way radio or public address system. All personnel will remain under cover until the Pyro Op calls the "all clear".

17. An "HOLD" may be called by anyone present if they see an unsafe situation developing (i.e. someone not under cover, a car approaching on the down range road, fire, smoke, etc.). The Pyro Op will ensure that the firing panel is de-energized and firing shunt re-established until such time as the situation has been corrected and the countdown can be safely started again.

18. If, after attempting to fire a test article one or more times without success, and a check of the firing circuit in the blockhouse does not reveal the problem, the firing panel will be de-energized and the firing shunt re-established. After a waiting period of at least 5 minutes (to guard against a hangfire), the Pyro Op will investigate the problem and either correct it or disarm the test article for removal, repair, or disposal.

19. Disposal of mixed propellant or propellant components will be conducted in such a way as to render them harmless and unrecoverable. This is usually accomplished by burning. The destruction or disposal of any residual propellant will be accomplished under the direct supervision of the Pyro Op or his assistant. Propellant burning will be conducted in an area approved by the Pyro Op for this purpose and will be cleared of any grass, plants, or other combustible materials. A class "A" fire extinguisher will be kept readily available during such operations.

EMERGENCY MEDICAL TRAINING

As part of this course, you will be provided with some basic emergency first aid training. This is not intended to be an all inclusive treatment of the subject, but will serve as a recent refresher and reminder of what a "first provider" of emergency medical assistance should be concerned with and carry out.

ENGINE HARDWARE DESIGN

by

Brian Wherley
Reaction Research Society, Inc.

MATERIAL SELECTION

The discussion of the important parameters for motor case design will center around the Bates grain that is used in the field lab of this course. From the outset this motor was designed to be simple and robust. It would, after all, be the composite propellant equivalent of the current RRS standard Beta rocket. The Beta has been in existence for nearly as long as the society. The Beta is simple, burns micrograin (a mixture of zinc and sulfur powder), is 2.5 inches in diameter, about four feet long and is a typical first rocket. The performance of micro grain leaves something to be desired with an Isp around 90 seconds. A suitable equivalent was sought for those craving more performance and the flexibility of ammonium perchlorate-based composite propellants. The design you will be loading and testing during the course is that engine. Beginning with the propellant formulation, this design is the product of a great deal of weekend testing and was developed to be reloadable with a life of many firings. Because you might be honing your own skills or researching new propellant formulations, as were the creators of this design, reloadability is important. Typically, the RRS members static fire any rocket motor before it is flown, often many times. When it has been proven, a flight vehicle is then constructed. The propellant formulation is about as simple as it can be made and still give reliable, respectable performance. The formulation includes the oxidizer, fuel or binder, an opacifier, a plasticizer, a bonding agent, a degassing agent and the curing agent. The Bates grain is one of the most simple grains to manufacture because it does not require a mandrel for the grain port but can be bored out after it is cured. It is also a segmented grain and lends itself readily to packing of the putty-like propellant. Many factors enter into the design of a solid propellant motor depending on what an individual has set out to accomplish with his/her amateur project. It always seems, however, that the overriding factors in amateur rocket motor construction are ease of fabrication and cost. The materials used are the most common commercially available. Steel and aluminum alloys are relatively inexpensive, dispensed in countless sizes, shapes and wall thicknesses and are widely available. In general, the machinability, formability and weldability of the common steels and aluminum alloys are very good to excellent. Though this engine design requires significant machine work, it is made from common and relatively inexpensive materials and no welding is required. The performance enhancement of a vehicle built with exotic materials is small and seldom warrants the added cost. There is enough work to do without worrying about who is going to roll a tube for your motor case out of some super nickel alloy, often referred to as "expencium" in the business.

A general comment about making the process of solid propellant engine fabrication easier, use off-the-shelf materials where available. Fasteners, raw stock, O-rings, snap rings, can be adapted to amateur building and are available everywhere. Some of the best off-the-shelf material references available include;

1) McMaster Carr industrial supply catalog for virtually anything you need
2) Aircraft Spruce & Specialty Co. for aircraft grade tubing, fittings, wood and composites
3) Grainger industrial supply catalog for some tools, fasteners, actuators, adhesives, etc.

4) Materials Engineering magazine Material Selector Guide for quick information on material properties for nearly every commercial material available
5) Tube Sales stock catalog, a handy tubing and pipe size reference
6) Parker O-ring catalog.

THERMAL PROTECTION

Steels are better for high temperature applications depending on the alloy and how it will be used. Aluminum is great for reducing weight, is usually easy to machine, but has a temperature limit of about 300 F. The fact that aluminum alloys have a relatively low service temperature limit only serves to underscore one of the design requirements for any solid propellant rocket motor, thermal protection. Thermal protection is required to prevent the motor case from coming in contact with the combustion gases, usually in excess of 5000 F. For this particular design, the most logical approach was to make the Bates grain segment propellant casing do double duty as a propellant casting cartridge and as thermal protection for the motor case. Thermal protection must have insulative and/or ablative characteristics suitable for the severe environment of the inside of a solid rocket motor. One family of materials that fill this requirement admirably are plastics. They tend to char readily and have exceptional insulating capability. When plastics char, they outgas and it is this outgassing that keeps the material below the char layer relatively cool. Perhaps the most common and inexpensive plastic is Poly Vinyl Chloride or PVC that can be found at any home store. In addition, PVC is tough and actually survives quite well in the combustion environment. Enough said, PVC it would be. For this particular motor it was mentioned earlier that the target outside diameter would be that for a standard RRS Beta micrograin rocket. As it turns out, another reason PVC, schedule 40 was chosen is that two-inch PVC pipe has just about the right outside diameter to fit inside a 2.5-inch aluminum tube with a 0.125-inch wall. (A note about pipe and tubing, a 2-inch tube has a 2-inch outside diameter and a 2-inch pipe has a diameter larger than two inches. This is universally true for other pipe diameters.) A single pass on the lathe and the PVC pipe can be tailored to fit snugly inside the motor case leaving virtually no dead space behind the grain segments for hot gases to leak into or through. Such hot gas leaks can burn a hole in the motor case or raise the local temperature until the case fails catastrophically. The bottom line is insulation is a good thing.

THE MOTOR CASE

Having had some input into what diameter motor case is desireable, namely matching that used in the Beta rocket, one can set about selecting a suitable alloy tube and wall thickness. As mentioned previously, aluminum is a favorite because of light weight, low cost and wide availability. The most common alloy out there is 6061-T6. 6061 is the alloy and T6 is the heat treat, the hardest available for that alloy with a tensile yield of about 40 ksi. From the desired thrust level and burn duration, which both have direct bearing on how much payload a vehicle can loft and how high it will go, one can calculate the design chamber pressure that the engine will need to operate (see appendix by Larry Teebken). With the chamber pressure in hand, we can now select a sufficiently thick wall that is readily available from a nearby supplier. But first, some basic structural calculations must be carried out in order to properly select the wall thickness. There are two types of stresses to be concerned about when determining what wall thickness will be required for the desired engine operating pressure, the hoop stress and the longitudinal stress. The hoop stress develops for an internally loaded pressure vessel in the case wall in the

circumferential direction. The longitudinal stress develops in the tube wall along the axis of the tube. The equation for the hoop stress is:

$$s = \frac{PD}{2t}$$

where: P = internal pressure in lb/in^2
D = outside diameter of the tube in inches
t = the wall thickness in inches
and s = the stress in lb/in^2

The idea is to leave yourself some margin, typically a factor of 1.5, on the yield stress of the material. Every metal has a characteristic tensile yield stress beyond which the material begins to permanently deform. For a motor case this is the point at which the round tube begins to grow in diameter. When the ultimate tensile strength of the material is reached, which is usually much higher than the yield stress, the motor case fails, this phenomenon is commonly referred to as an explosion. Explosions should be avoided. Use no less than 1.5 as a safety factor on yield stress.

The other stress mentioned above is the longitudinal stress. It can be calculated using the relation for thin walled pressure vessels:

$$s = \frac{PD}{4\tau}$$

Notice that the longitudinal stress is one-half that of the hoop stress, always. This information is useful for determining the maximum allowable depth of the snap ring groove on the inside of the motor case. If the wall is thinned to much to accommodate the snap-ring, the motor case could fail in the longitudinal direction. This is a perfect time to talk about the snap ring. A snap ring was selected as the method for retaining the forward bulkhead and nozzle because it is simple and inexpensive while being clean, light and readily removable over and over. For significantly larger diameter motors, snap rings are not as useful. They are, however, perfect for this application. The structural consideration for the snap ring in this application is the shear strength of the snap ring itself. This is usually not the limiting factor in determining the structural maximum operating pressure; circular cross-section tubes invariably fail in hoop.

SEALS

Briefly, the seals in this motor are almost exclusively O-rings. Many compounds are available in an almost infinite array of sizes. For an in-depth visit to the world of O-rings, consult the Parker O-ring catalog. It contains a wealth of design information from groove dimensions to material compatibility of the various compounds. Suffice to say that silicone rubber is one of the best materials available for sealing at elevated temperatures. The O-ring cross-sectional diameter should provide sufficient exposed material when installed in its sealing groove or *gland* to fill in surface irregularities inside the motor case. This is one of those things that becomes easier to judge with greater experience. Check the Parker catalog if a question arises. In addition to sealing the nozzle and forward bulkhead, O-rings are used to space the grain segments. This is necessary because when the motor is ignited and the chamber pressurizes, the solid propellant is squeezed against the motor case wall and it deforms elastically. It is after all, partly polyurethane rubber. If the segments

were too close together, this deformation might prevent combustion from taking place over the entire exposed surface of the propellant as it was designed burn for the Bates grain. This could result in lower than expected thrust or some other disaster. These particular O-rings gap the segments by about one-tenth of an inch or 100 mils which serves the purpose intended.

GRAPHITE NOZZLE

Graphite is the material of choice for the amateur solid rocket motor builder because it is inexpensive, readily available and sublimes (changes from a solid directly to a gas) in a non-oxidizing, 6000 F atmosphere. Above 600 F, free oxygen and water (as a gas) can react with graphite producing carbon dioxide and as such graphite does not make a good high temperature material in an oxidizing environment. It is easily machineable, though a good quality, tight fitting respirator is required to protect the machinist from the dust. The structural consideration for using graphite is to not exceed its compressive strength which ranges from 2 ksi for general purpose industrial grade material to 60 ksi for pyrolitic grade. Know what grade you are using. The best information on a particular graphite is available from the supplier. It should be noted there are few other materials except for the refractory metal ceramics that have similar service temperatures, for example zirconium oxide is good to 4000 F. Though these ceramics are much more resistant to oxidizing environments than graphite, they often suffer from fracture due to thermal shock and are much more expensive and difficult to machine. Experiment, but be aware of these drawbacks. There are virtually no metals that you would want to use as a nozzle unless you routinely fabricate large tungsten components at home. One last note about graphite, it is thermally conductive and after burnout or if the burn duration is relatively long, the heat soak-back can cook your O-ring seal. Be aware and inspect O-rings between tests.

FORWARD BULKHEAD

The material of choice for the forward motor case bulkhead is again 6061-T6 aluminum alloy. It is widely available, strong, light weight, easily machineable and corrosion resistant. All of this information, except for the availability, is contained in the Material Selector Guide listed previously. Because it is common it is also relatively inexpensive. Steel is unnecessarily heavy, harder to machine and may oxidize. The forward bulkhead is also retained with a snap ring. For the course test motor, the forward bulkhead serves three functions: 1) It is the forward closure of the motor, 2) It houses the igniter, and 3) It provides a port for the measurement of chamber pressure. The forward bulkhead also has an O-ring gland that uses a silicone O-ring seal. The pressure tap port and igniter port can either be a straight thread with an O-ring seal (AN port) or can be 1/8-inch pipe thread. Either port works well, though the pipe thread is probably easier for the home rocket builder to fabricate.

ASSEMBLY

The final assembly of the motor takes place after the grain segments have all been prepared and the time has arrived to test the motor.

1) The graphite nozzle has an O-ring groove that requires installation of a Parker #2-226 silicone O-ring. Both the O-ring and nozzle must be coated with a compatible grease to facilitate sliding the nozzle/segments into and back out of the motor case after the firing.

Calcium grease is what is used for this class. It works to fill the minor gaps behind the grain segments so that hot combustion gas cannot leak around the segments and cause a motor case burn through or pressure rupture due to local overheating of the case wall. With the O-ring greased and installed on the nozzle and the nozzle itself greased, the assembly is inserted into the exit end of the motor case (the end where the snap ring groove is closest to the tube end) and seated just below the snap ring groove.

2) A steel, .045-inch thick back-up washer is then placed on the nozzle exit and the snap ring installed.

3) Turning the engine over, the first grain segment is then prepared by coating the outer PVC shell with calcium grease making sure not to get it on the propellant surface. To the end that will go against the graphite nozzle, apply some automotive RTV silicone rubber sealer on the exposed PVC. Insert the segment until it is roughly one-half inch below the forward bulkhead snap ring groove. Wipe away the excess grease.

4) Grease and install a silicone O-ring on top of this grain segment.

5) Now grain segment number two can be greased on the outer PVC surface and slid in place above grain segment number one. Another silicone O-ring is greased and installed exactly as the first. Repeat this process until all segments are installed and seated firmly against the graphite nozzle at the bottom of the assembly. A greased silicone O-ring should be the last item visible on top of the stack up.

6) The forward bulkhead can now be installed. The bulkhead must be installed ***without*** the igniter for obvious safety reasons. Grease a silicone O-ring and slip it into the gland on the forward bulkhead. Slide the bulkhead into the motor case until it is seated against propellant grain number five below the snap ring groove.

7) Install the snap ring. The motor is now ready to be transported to the test stand where the igniter will be installed immediately before the motor is to be test fired.

Remember to always exercise caution, common sense and wear the proper protective equipment when assembling these motors. Gloves, protective eye wear, a face mask, a protective cotton apron and a grounding strap should be worn when working with live propellant.

ENGINE HARDWARE DRAWINGS

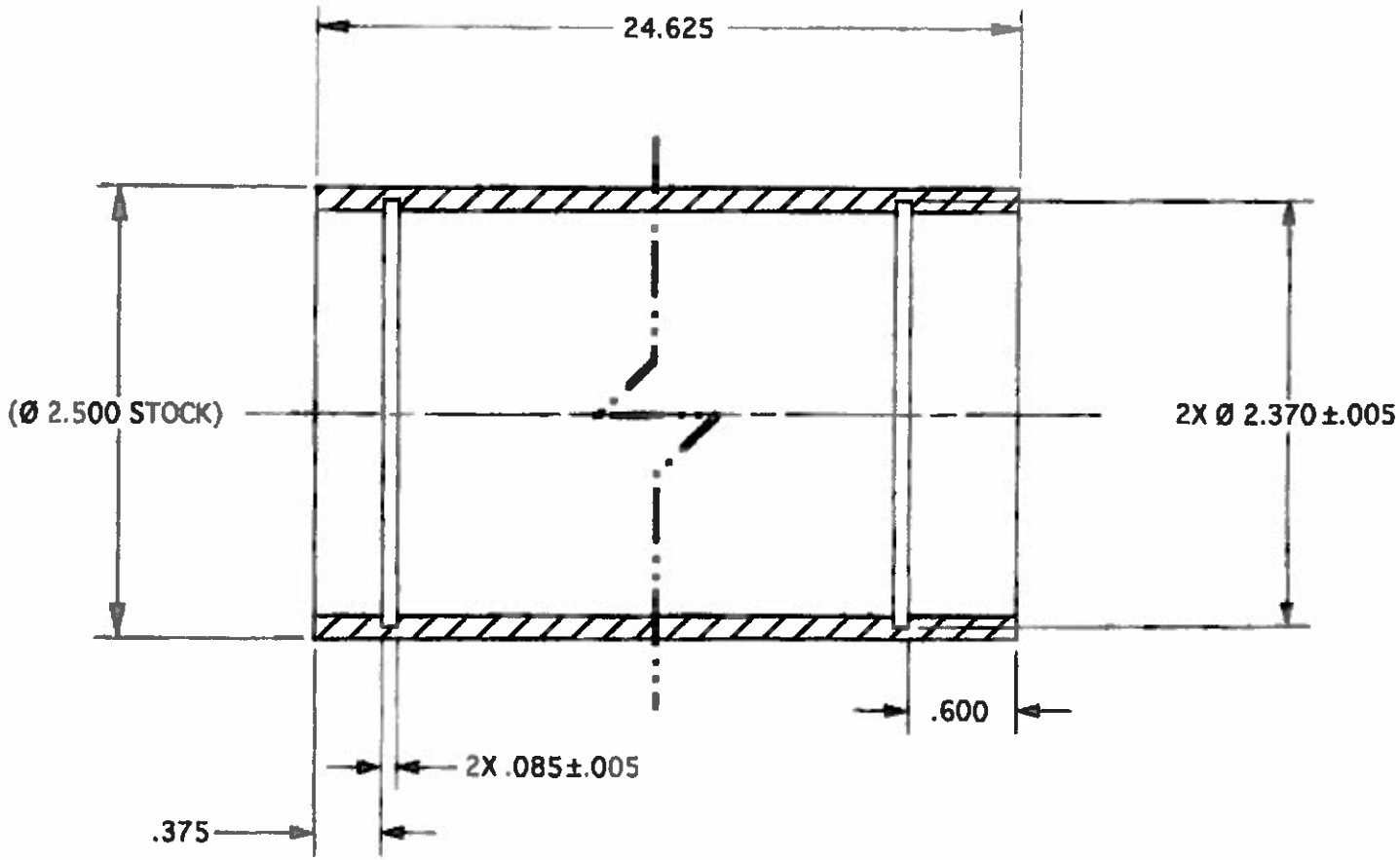

MATERIAL	SIZE	SPECIFICATION, NOTES
6061-T6 Alum Tubing	2.5 O.D. X .125 Wall	

DEFAULT TOLERANCES
- ANGLES: ±0.5°
- DECIMALS:
  .X ±.1
  .XX ±.03
  .XXX ±.010

Reaction Research Society
P.O. Box 90306 Los Angeles, CA 90009

SIZE: A

TITLE: Casing, Rocket Motor

DESIGN BY	DRAWN BY	DWG NUMBER		
George Garboden	Jim McKinnon	RRS00001		
UNIT	DATE	UNITS	SCALE	SHEET
2.5 Inch Rocket Motor	3/17/96	INCH	1/1	1

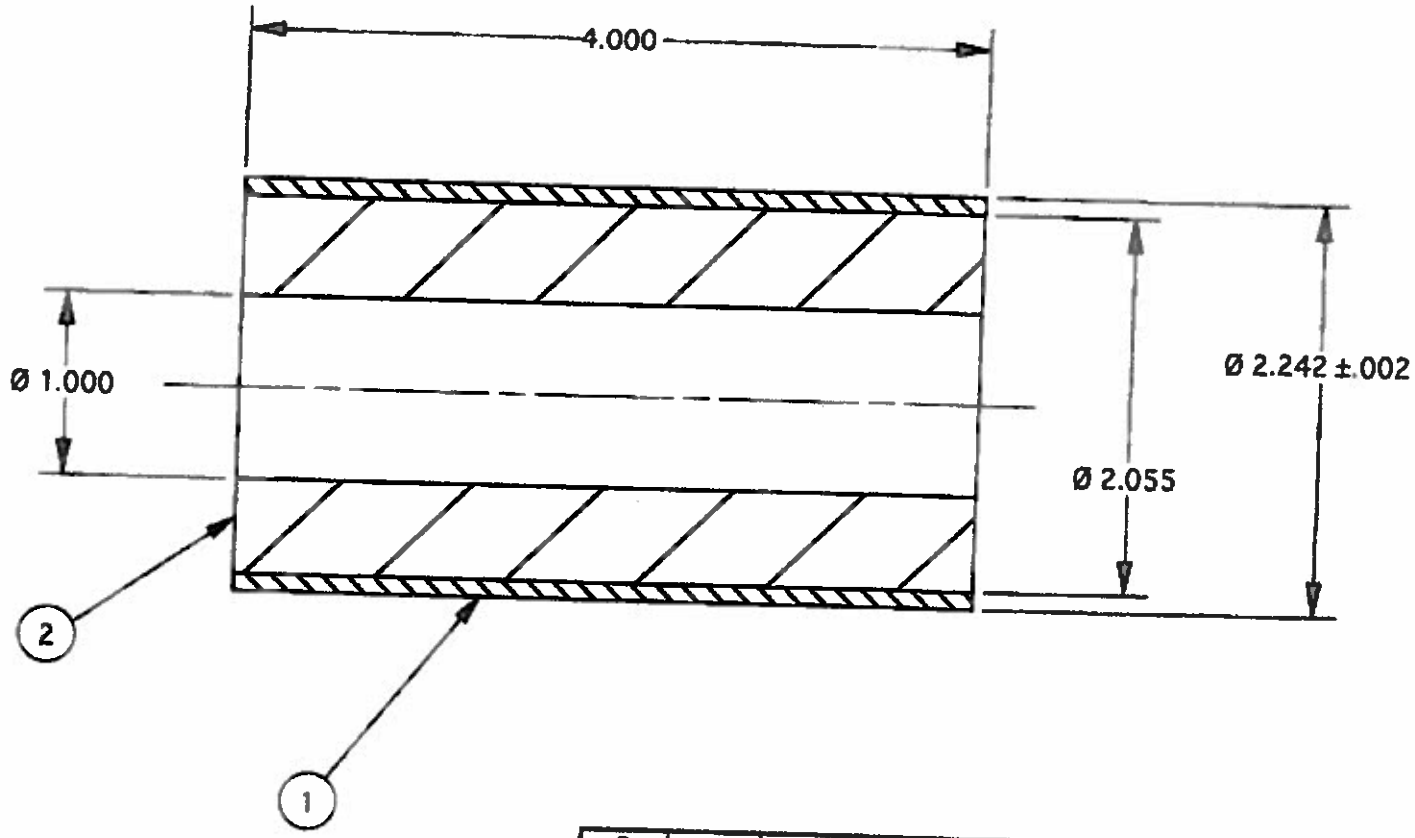

ID	QTY	PART NUMBER	PART DESCRIPTION	MATERIAL	SIZE
2	1	RRS00002-2	Propellant Casting		
1	1	RRS00002-1	Casing, Propellant	PVC Tubing	

DEFAULT TOLERANCES
- ANGLES: ± 0.5°
- DECIMALS:
  .X ± .1
  .XX ± .03
  .XXX ± .010

Reaction Research Society
P.O. Box 90306 Los Angeles, CA 90009

SIZE: A

TITLE: Cartridge Assy, Propellant

DESIGN BY	DRAWN BY	DWG NUMBER		
George Garboden	Jim McKinnon	RRS00002		
USE: 2.5 Inch Rocket Motor	DATE: 3/17/96	UNITS: INCH	SCALE: 1/1	SHEET: 1

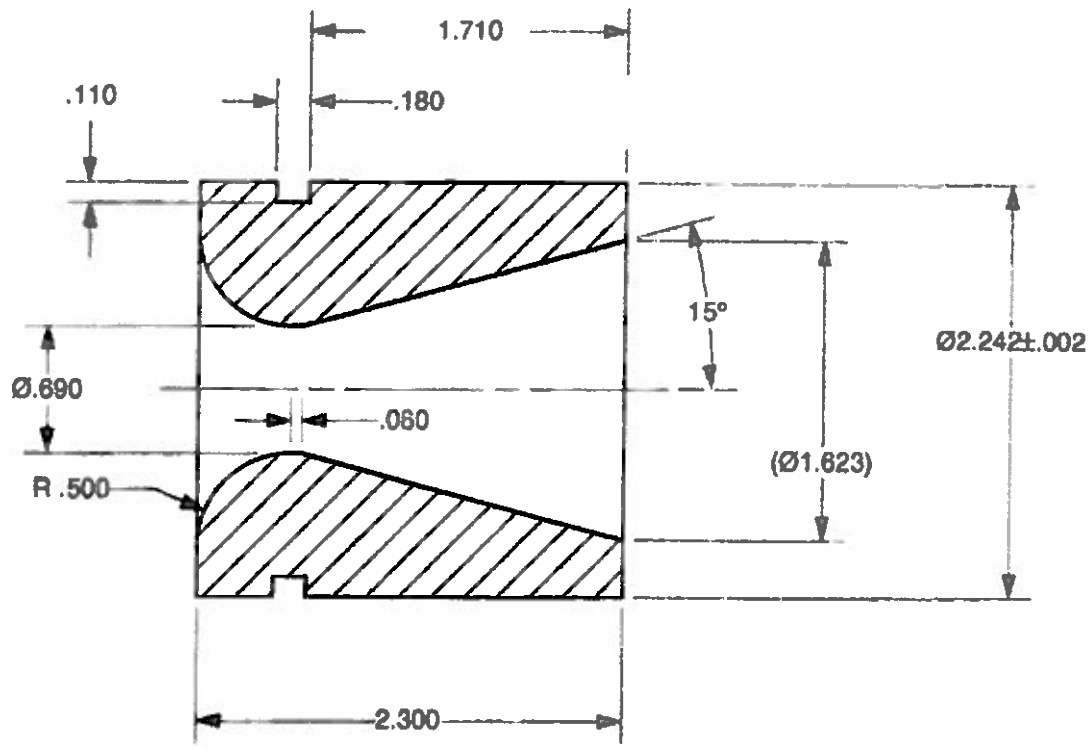

GRAPHITE		
MATERIAL	SIZE	SPECIFICATION, NOTES

DEFAULT TOLERANCES
- ANGLES: ±0.5°
- DECIMALS:
  .X ±.1
  .XX ±.03
  .XXX ±.010

Reaction Research Society
P.O. Box 90306 Los Angeles, CA 90009

SIZE	TITLE
A	Nozzle, Rocket Motor

DESIGN BY	DRAWN BY	DWG NUMBER
George Garboden	Jim McKinnon	RRS00003

UNIT	DATE	UNITS	SCALE	SHEET
2.5 Inch Rocket Motor	4/16/96	INCH	1/1	1

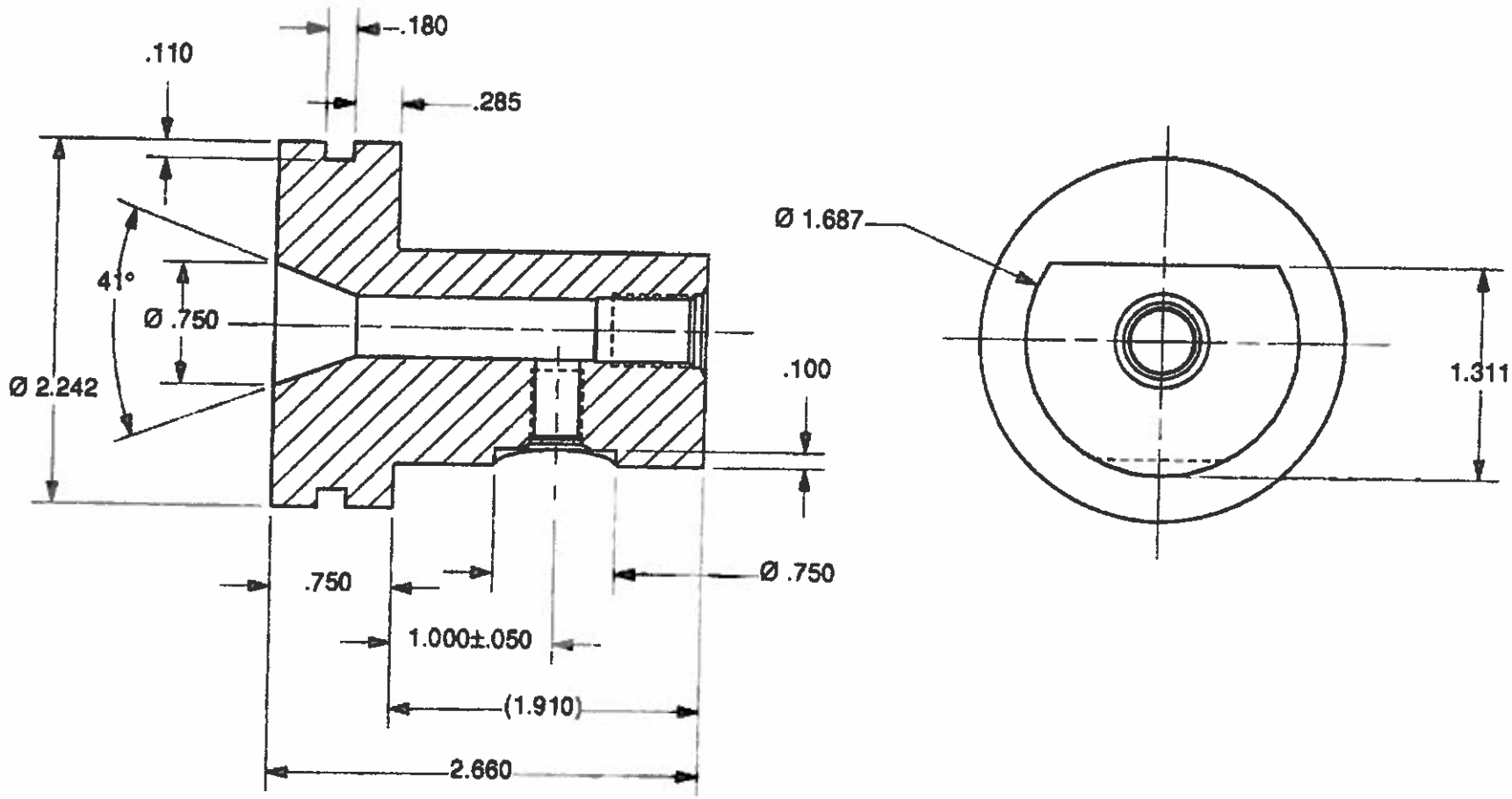

6061-T6 ALUMINUM		
MATERIAL	SIZE	SPECIFICATION, NOTES

DEFAULT TOLERANCES
- ANGLES: ± 0.5°
- DECIMALS:
  .X ± .1
  .XX ± .03
  .XXX ± .010

Reaction Research Society
P.O. Box 90306 Los Angeles, CA 90009

SIZE	TITLE
A	Bulkhead, Static Test

DESIGN BY	DRAWN BY	DWG NUMBER
George Garboden	David Crisalli	RRS00004

CUSTOMER	DATE	UNITS	SCALE	SHEET
2.5 Inch Rocket Motor	4/16/96	INCH	1/1	1

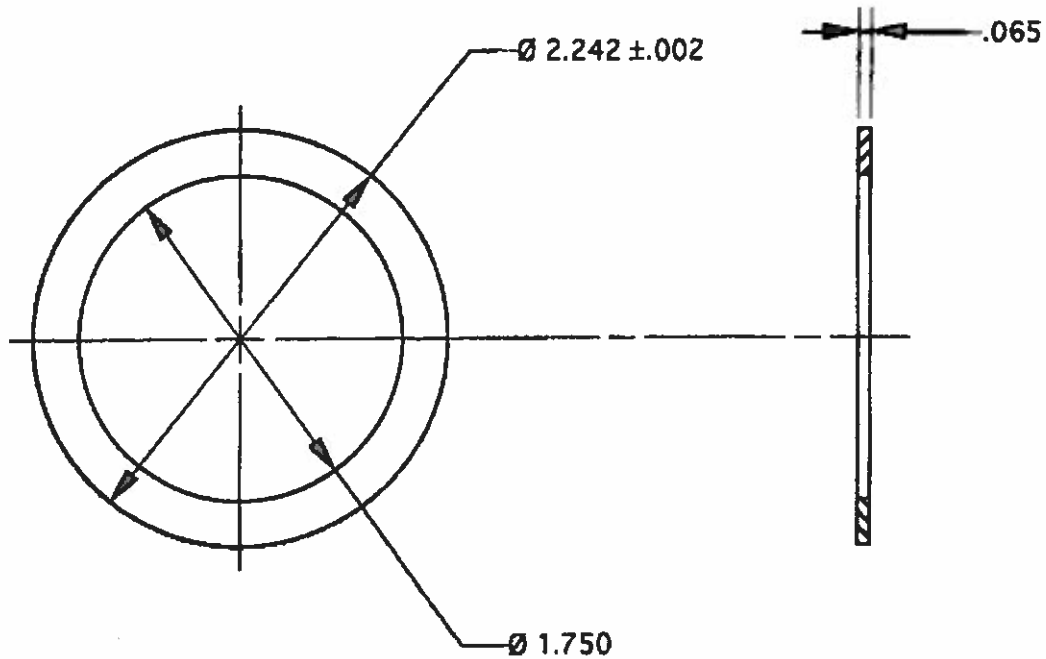

G10 Fiberglass		
MATERIAL	SIZE	SPECIFICATION, NOTES

DEFAULT TOLERANCES
- ANGLES: ± 0.5°
- DECIMALS:
  .X ± .1
  .XX ± .03
  .XXX ± .010

Reaction Research Society
P.O. Box 90306 Los Angeles, CA 90009

SIZE: A	TITLE: Spacer, Rocket Motor			
DESIGN BY: George Garboden	DRAWN BY: Jim McKinnon	DWG NUMBER: RRS00005		
UNIT: 2.5 Inch Rocket Motor	DATE: 3/17/96	UNITS: INCH	SCALE: 1/1	SHEET: 1

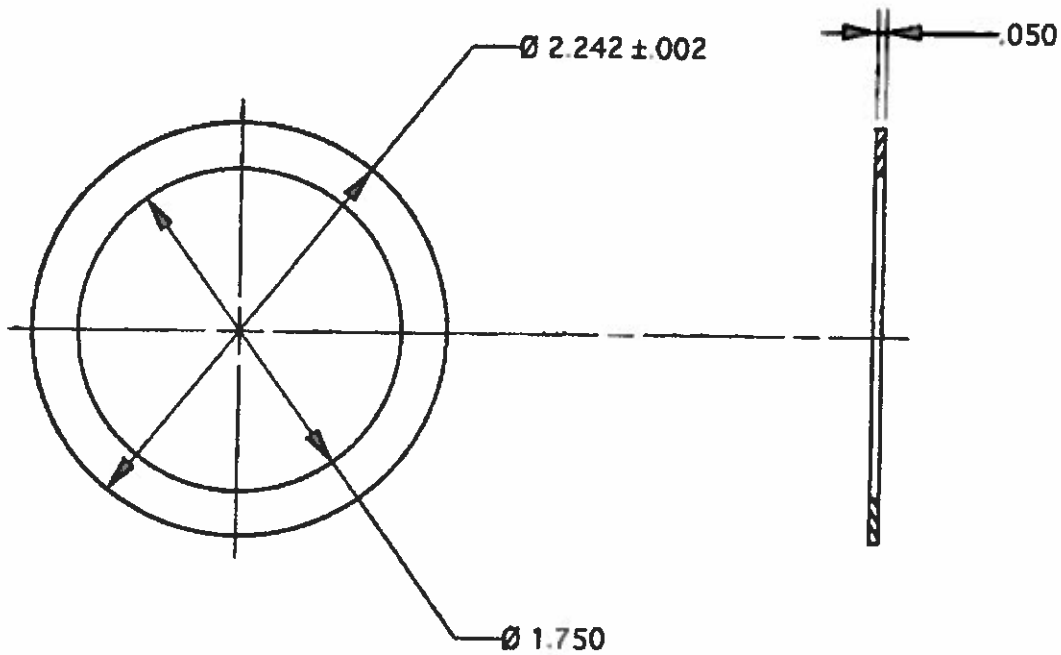

Mild Steel		
MATERIAL	SIZE	SPECIFICATION, NOTES

DEFAULT TOLERANCES
- ANGLES: ± 0.5°
- DECIMALS:
  .X ± .1
  .XX ± .03
  .XXX ± .010

Reaction Research Society
P.O. Box 90306 Los Angeles, CA 90009

SIZE	TITLE
A	Retainer, Rocket Motor

DESIGN BY	DRAWN BY	DWG NUMBER
George Garboden	Jim McKinnon	RRS00006

UNIT	DATE	UNITS	SCALE	SHEET
2.5 Inch Rocket Motor	3/17/96	INCH	1/1	1

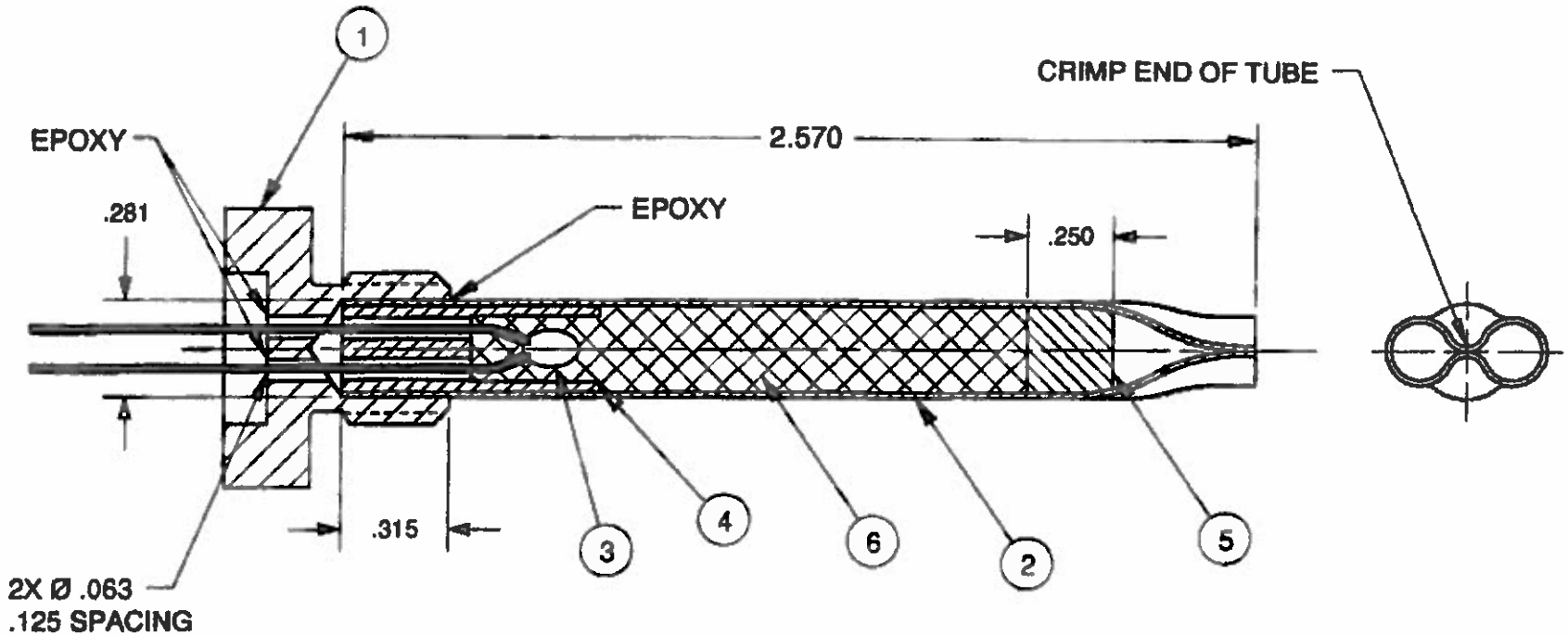

QTY	ID	PART DESCRIPTION	MATERIAL/NOTES
AS REQUIRED	6	BLACK POWDER (4F) / TITANIUM DUST	50/50 BY WEIGHT
AS REQUIRED	5	PAPER FILLER	
1	4	PLASTIC MATCH SHEATH	PVC
1	3	ELECTRIC MATCH	
1	2	9/32 TUBE X .015 WALL	ALUMINUM
1	1	MAKE FROM MS24391D4 BLEEDER PLUG	ALUMINUM
-1	-	IGNITOR ASSEMBLY	-

DEFAULT TOLERANCES
- ANGLES. ± 0.5°
- DECIMALS:
  .X ± .1
  .XX ± .03
  .XXX ± .010

Reaction Research Society
P.O. Box 90306 Los Angeles, CA 90009

SIZE: A
TITLE: Ignitor Assembly

DESIGN BY: David Crisalli
DRAWN BY: Jim McKinnon
DWG NUMBER: RRS00008

CUSTOMER: 2.5 inch Rocket Motor
DATE: 4/16/96
UNITS: INCH
SCALE: 2/1
SHEET: 1

PROPELLANTS

by
Lawrence G. Teebken
Pyrotechnic Operator, First Class
Reaction Research Society, Inc.

INTRODUCTION:

This section of the course is directed, primarily, at the propellant ingredients that will be used in the motor the student will build and fire during the next few days. It does include other basic information about related propellant ingredients and chemistry. It is not intended to be an exhaustive treatment of the subject, but is tailored to give the student a basic understanding of what the various ingredients in solid propellants are and how their use effects the characteristics of the finished propellant. The student is directed to the extensive list of references at the end of this section for further information about propellant formulations, chemistry, and processing.

FORMULATION INFORMATION:

Oxidizer: Ammonium Perchlorate (NH_4ClO_4) (AP) : 77.1 %: This compound provides the oxygen needed to burn the other ingredients of the propellant.

Resin: Hydroxyl-terminated Polybutadiene (HTPB; R45HT): 10.0 %: This compound has groups attached to its molecule that react with the curing agent to form a firm, rubbery material which holds everything together and gives the propellant some physical strength. Another resin that is currently being used is known as Polybutadiene Acrylonitrile (PBAN). It is available to RRS members. This resin is quite a bit more viscous than the HTPB, but it is used widely and makes a very good propellant binder.

Curing agent: PAPI (Polyisocyanate): 1.1 %. Causes the binder to transform itself from a liquid to a tough, rubbery solid. If PBAN resin is used, then the curing agent used would be an epoxy. This epoxy is also available to RRS members.

Plasticizer: Di-octyl Adipate (DOA), an organic ester: 4.4 %: Used to help "thin out" the binder, which is very viscous, so that the propellant can be more easily processed. An ester is a compound formed by the reaction of an organic acid with an alcohol. DOA is known as a non-reactive plasticizer, that is, it merely dilutes the resin causing it to become less viscous (because the DOA itself is about as fluid as water, whereas the Polybutadiene has the consistency of extremely thick honey).

There are other compounds known as reactive plasticizers, that is, they not only dilute the resin, but they also have chemical groups on their molecules that will react with the curing agent and the binder chemicals to become part of the rubbery solid that is produced. This has the added advantages that the reactive plasticizer cannot evaporate out of the rubber over time which would cause it to lose some of its rubberiness as well as causing some shrinkage due to the loss of the plasticizer and, because it becomes an actual part of the structure of the binder, it usually helps to increase the strength of the propellant, as well. Shrinkage can cause physical stressing of the propellant to such an extent that it can tear and form cracks, which cause increased burning area and possible explosion. DOA,

however, has little or no tendency to evaporate so there is essentially no shrinkage problem as long as the propellant is not stored for years.

Additives:

Aluminum: Al: The size range (referred to as its "mesh") can be from just a few microns to as much as 100 microns in diameter. Two commonly-used sizes are 10 and/or 60 microns. Sometimes, the larger sizes can cause a slight decrease in burning rate, as well. Burns to form aluminum oxide at a typical temperature of about 5000 - 7000 degrees F. 6.7 %. This high temperature helps greatly to increase the specific impulse of the propellant. Also, it is usually added to a propellant at the expense of the oxidizer. In this case, if it is substituted for ammonium perchlorate, then it actually can make the propellant somewhat less viscous. This is because the aluminum is more dense than the oxidizer it is replacing, so it takes up less space than the replaced oxidizer. This means that the propellant will then contain slightly less volume of solids than it would without the aluminum present. As will be seen later, this results in a less viscous, and more easily processable propellant.

Bonding agent: HX878 (composition unknown, but probably an organic amine-type of compound): 0.7 %: One end of the molecule bonds to the solid particles dispersed in the binder and the other end reacts with a small amount of the polyisocyanate curing agent. The result is a tight chemical bond between the solid particles and the binder. Because a small amount of curing agent is used up in this reaction, a slight excess of curing agent is needed in order to maintain the required amount needed for proper curing of the binder. An amine is an organic compound having a group attached to it that is composed of one nitrogen and two hydrogen atoms. This group has a tendency to attach itself to some compounds to form a rather firm chemical bond.

Anti-foam: SAG: 4 drops (approx. 0.2 grams or 0.0038 %): A silicone-based oil similar to Dow Corning Co. DC-200 silicone oil. See later section in this document for a more complete explanation of the use of this type of compound.

Opacifier: None (typically carbon powder, but aluminum powder can do double duty as an opacifier in addition to its role as an energetic fuel additive.) The term opacifier comes from the word opaque, which describes a material that cannot be seen through (that is, it is not transparent). The reason for its use is to make the propellant non-transparent to infrared (heat) radiation given off by the combustion process. It has been known to happen that this heat can penetrate a transparent propellant grain and heat the interior of the grain so much as to cause it to ignite internally. The effect is usually due to the focusing of the heat radiation by small bubbles in the grain (much like a lens focuses visible light) to a small area within the grain. The intense heat produced can ignite the propellant in the same way that a lens focusing sunlight onto a piece of paper will heat it enough to cause it to burst into flames. If a grain starts burning inside of itself, it leads to uncontrolled production of gasses and explosion.

Anti-oxidant: There are many chemicals which can be used as anti-oxidants. The purpose of these compounds is to react with the atmospheric oxygen and ozone that slowly diffuse into the rubbery propellant over time or which may already be there as dissolved gasses. This reaction helps to keep the oxygen and ozone from reacting with the propellant ingredients (especially the binder ingredients) which could result in the propellant becoming either too brittle or too soft. If a propellant becomes too brittle, it can crack and fall apart under stress of pressurization or acceleration. The extra burning area resulting from these cracks can cause an explosion.

If a propellant becomes too soft, it can literally flow out of the nozzle or become so soft as to be unable to resist the combustion pressure. It will then flow even more and control of the burning area will again be compromised. Additional burning area can again be produced, leading to explosion, as before. The liquids that are used to make the propellant will always contain some dissolved gasses from the atmosphere or from their manufacturing process.

The best way to minimize these gasses being in the propellant is to degas the propellant ingredients before, and during, the mixing process by use of a vacuum environment. However, there will always be a small amount of these gasses left in the ingredients because no gas removal method is perfect. If the propellant is going to be exposed to either high temperatures or to extended storage times (or both), then addition of anti-oxidant is a wise choice. However, if a propellant is going to be made in such a way that it will not be exposed to high temperatures and/or will not be stored for any extended time, then anti-oxidant will not be needed. Processing temperatures in the range of room temperature to about 140 degrees F should not require anti-oxidant as long as the processing time does not extend to several hours at the elevated temperature. Storage times of a few days to a few weeks should not be harmful either if storage is at, or near, room temperature or below.

As to the types of chemical compounds that are used as anti-oxidants, there are, as previously stated, quite a few. One class is known as phenolics; these are simply compounds that have a hydroxide unit attached to a benzene ring. A hydroxide unit is composed of an oxygen atom with an attached hydrogen atom. Another class is known as an amine (previously mentioned in the section on bonding agents). Still another class is composed of organic compounds which contain phosphorus units known as phosphites.

A common pair of anti-oxidants contained in most breakfast cereals to ensure long-term freshness are BHT and BHA. These stand for Butylated Hydroxytoluene and Butylated Hydroxyamine. The first compound is also available as a preservative for industrial oils under the name DBPC: Dibutyl-para-Cresol, also known as Di-tertiary Butyl-para-Cresol.

These compounds would typically be available through the catalogs of laboratory supply companies, such a VWR Scientific and Fisher Scientific. They may also be available through some of the supply companies that distribute pyrotechnic supplies. Note that the common vitamin, Vitamin E, is an anti-oxidant! It has recently been proposed in the plastics industry that it would be a cost-effective alternative to some of the compounds mentioned above, as well as being environmentally friendly. Vitamin E is typically sold as a given number of International Units of strength per capsule. For Vitamin E itself (and the values are different for different vitamins!), one International Unit is equivalent to one milligram (i.e., one-thousandth of a gram) of the Vitamin E compound.

Assuming we have one pound of propellant containing 20 % binder, and assuming that we want to have 0.5 % by weight of anti-oxidant based upon the binder content, then we have 0.2 pound of binder and we need 0.005 * 0.2 lb. = 0.001 lb. of anti-oxidant. Now, 0.001 lb = 0.001 * 453.5926 grams/lb = 0.4535926 grams or, approximately, 0.45 grams of Vitamin E. Assuming that we use capsules containing 500 I. U. (International Units) of Vitamin E, which we now know is equal to

500 I.U. * 0.001 gram/ I.U. = 0.5 gram Vitamin E/capsule,

then we need 0.45 grams/(0.5 gram Vitamin E/capsule) = 0.9 capsule. Round this off to one capsule and we'll have slightly more than 0.5 % anti-oxidant. Since, anti-oxidant levels usually range anywhere from a few hundredths of a percent to as much as 1-2 % by weight of binder, then the calculated amount above is perfectly acceptable. The Vitamin E

is usually supplied in oil-filled gelatin capsules. So, we would just get one capsule, split it open, and empty the contents into our binder mixture and then mix it in thoroughly. Remember, though, that Vitamin E may react somewhat with the curing agent, so it is best to use as little as we can to do the job.

In this course, the propellant being made will not be subjected to extreme temperatures or to long storage times. So, it will not be necessary to add anti-oxidant.

Catalyst: A catalyst is a compound that helps a reaction to progress at a faster rate than it otherwise would, but is itself essentially unchanged in the process. We say essentially because it is possible for a catalyst to change temporarily during a reaction. However, if it eventually returns to its original form at the end of the process, then it is still qualified to be called a catalyst. An important point to know, though, is that a catalyst helps a reaction to go more easily in either the forward OR the reverse direction! For example, a curing catalyst helps the resin-curing agent system too quickly form the end product, which is a rubbery compound. BUT, it also helps the rubbery compound to break up back into its original compounds—the resin and the curing agent! The only reason that the reverse action does not occur, for all practical purposes, is that the rubbery compound formed is a solid, insoluble material and the required energy to return it to its original state as two liquids is not available in sufficient quantity to do the job.

Common catalysts for polyurethane reactions are organic compounds containing the elements tin or iron. Dibutyltin dilaurate and ferric acetylacetonate are only two such compounds, but either of these compounds works quite well, as do many others. Also, they catalyze the polyurethane reaction so much that very small amounts of water in the system do not have time to react very much with the curing agent to form carbon dioxide, which was previously noted as being undesirable. This means that the system is a little less sensitive to very low amounts of moisture, but it is still advisable to keep all chemicals as dry as possible

In this course, there will be no need to use curing rate catalysts because the two ingredients that form the rubber product react so quickly by themselves that a catalyst is not needed.

GRAIN TYPES:

Bates:

Neutral Bates-type cartridges: Mathematically designed to have an almost constant burning area (within about +/- 2 % of average value) throughout the burn time.

Cartridges: Convenient to make and cure.

Monolithic: The whole engine is filled with propellant. This makes better use of the chamber volume which results in more propellant in a given engine, but is more difficult to manufacture since the propellant must be cast around some sort of removable core. The removal of the core (which usually entails sliding the core against the surface of the propellant) can be a dangerous operation due to the ever-present possibility of ignition of the propellant by heat produced as a result of friction. Also, since the propellant is, typically, an insulator, it is also possible to imagine a situation wherein static electricity could present a possible ignition hazard. Although the risk may be low, it should not be ignored.

Non-Neutral:

Progressive: Can be used to obtain burning rate, specific impulse, and area ratio dependence vs. operating pressure in one test firing instead of having to run 10-20 tests with various throat diameters. This reduces costs.

Regressive: Can be used to the same advantage as a progressive burning grain, but doesn't seem to be used as often.

VISCOSITY:

Solids Loading: Solids-To-Liquids Volume Ratio (S/L) Effects:

S/L = Vol. % Solids / (100 % - Vol. % Solids)

Vol. % Solids = 100 % * Vol. Solids / (Vol. Solids + Vol. Liquids)

PROCESSABILITY CRITERIA[1]

S/L Volume Ratio	Characteristics
Above 3.5	Virtually unprocessable
3.0 - 3.5	Processable with difficulty
2.5 - 3.0	Normal processability
2.0 - 2.5	Very easily processable
Below 2.0	Settling difficulties may occur

(1) Propellant Chemistry, by S. F. Sarner, Reinhold Pub. Co., N. Y., 1966, p. 138

EFFECTS OF OXIDIZER CRYSTAL SIZE AND SHAPES:

Size: Larger particle sizes tend to have less effect upon viscosity because their surface area per unit volume is relatively low. When particles sizes decrease, then the surface area per unit volume increases rapidly. As a result, large amounts of very small particle sizes (e.g., less than 100 micron diameter or less than about 0.004 inch diameter) can cause the viscosity to increase greatly until, eventually, a mixture becomes unprocessable.

One important fact should be noted, however. Experience has shown that with an oxidizer that is composed of particles that are nearly all of the same size, the processability is not good even at low S/L values (such as 1.5, or so). So, the above chart probably pertains to oxidizers having a mixture of particle sizes. It is well known that mixtures of two or more particle sizes (known as multi-modal mixtures) produce a viscosity that is much lower at a given percentage solids loading than that of a single particle size (known as uni-modal). When multi-modal mixtures are used, the average of the particle sizes should be close to the particle size that is desired or the burning rate will not be that which had been planned. The most common particle sizes available seem to be 400, 200 and 90 microns. The Reaction Research Society, Inc. has available the sizes 200 and 90 microns. If needed, 400 microns can be obtained.

For example, if we desire an average particle size of 200 microns, but wish to use a bi-modal (i.e., 2 particle sizes) mixture, then we will need to have a mixture of a particle size

larger than 200 microns coupled with a particle size lower than 200 microns. Let's assume that the two particle sizes available are 400 micron and 90 micron (sizes commonly available from commercial manufacturers):

Assume that the sum of the two fractions of particle sizes adds up to one.
Let x = fraction of 400 micron size. Then, (1-x) = fraction of 90 micron size.

So:	x*400 + (1-x) *90	=200*1 ;
	x*400 + 90 - x*90	=200*1 ;
	x*400 - x*90	=200 - 90 = 110 ;
	x*310	=110 ;
	x	=110/ 310 = 0.35484, by weight
So:	(1-x)	= 1- 0.35484 = 0.64516, by weight

Thus, for every pound of AP needed, we must use 0.35484 pound of 400 micron AP plus 0.64516 pound of 90 micron AP.

To check the result :

$$0.35484*400 + 0.64516*90 = 200.0004 \text{ microns.}$$

This is certainly close enough to the desired average particle size.

Smaller particle sizes tend to produce higher burning rates. In addition, particle sizes smaller than 50 micron diameter (and definitely less than 35 micron diameter!) are generally not made until actually needed and are then used up as soon as possible after being made. This is because particles of AP this small and smaller tend to be unstable and can spontaneously ignite or explode, especially if the particles are only a few microns in diameter! So, try to get by with the larger particle sizes if possible, unless it is absolutely necessary to get the much higher burning rates afforded by the use of extremely small sizes.

Also, the smaller the particle size, the higher the burning rate pressure exponent and, therefore, the more sensitive the combustion pressure to the oxidizer loading. For extremely small particle sizes (e.g., 10 microns and less), the burning rate exponent can be equal to, or greater than, that for potassium perchlorate, which is typically a value of n = 0.75 - 0.80. A burning rate exponent greater than 1.0 causes the burning process to be unstable and can cause a rocket to explode if there is a disturbance to the combustion process. A value less than 1.0 is stable: a disturbance tends to cause the operating pressure to return to the design level rather than grow dangerously larger. So, the closer the exponent is to the value of 1.0, the more likely is the combustion process to be unstable.

Finally, **it is very important to keep AP as dry as possible!** According to the book PERCHLORATES, Their Properties, Manufacture and Uses, edited by J. C. Schumacher, Reinhold Pub. Corp. New York, 1960, p. 215, "Ammonium perchlorate was found to be most sensitive to ignition at a moisture content of 0.02 to 0.5 percent, particularly when it is contaminated with copper and possibly in the presence of other metallic contaminants." This also implies that the use of copper compounds, such as copper chromite, etc., may not be a good idea even though they tend to give much higher burning rates than other compounds, such as iron oxide. It may be safer, overall, to get higher burning rates by using iron oxide and higher operating pressures.

Shape: The shape of particles can have a definite effect upon viscosity, as well. Particles that are well-rounded, such as perfect spheres or even "potato- shaped" particles (or spheroids, as they are known) don't increase viscosity as much as do particles that are cubically shaped or which have other angular shapes such as needles, plates, etc., because angular particles don't roll around like ball bearings but, instead, tend to clump up and get into each others' way more readily. This effect, however, tends to become unimportant for very small particle sizes. When ordering the AP, it will be necessary to ask for spheroidal, or rotary-rounded, or spherical, etc., particle shape in the particle size(s) desired. But, typically, particle sizes equal to, or less than, 50 micron diameter are not produced in any shape other than the natural crystalline shape of AP (cubical) or as ground-up crystalline material of indeterminate shape. Again, in these small particle sizes, the exact shape has less effect upon viscosity than the larger particle sizes of the same shape.

EFFECTS OF OTHER FACTORS:

Heat: Increasing the temperature of the mixture can lower the viscosity significantly. If the additional heating does not have an effect upon the gel or cure times, then it can be very useful. However, heating is usually only feasible if the curing agent has not yet been added since, with binder systems such as polyurethanes or epoxies, the rate of curing is increased greatly with only small amounts of heating. Thus, it can be worthwhile to heat the binder system and other ingredients to a moderately high temperature (e.g., 140 - 200 degrees F) in order to thoroughly disperse and mix the solid ingredients while the liquid binder is at a lower viscosity. This also helps to release any gas bubbles that are in the mixture, especially if vacuum mixing is employed. It is usually also true that increased temperatures reduce the surface tension of most liquids. So, this means that the liquids will "wet" the surfaces of all the solid ingredients much more completely. This ensures that the binder components bond strongly to all of the solid ingredients, which helps to keep the physical strength of the propellant as high as possible.

When the solid ingredients have been thoroughly mixed and "wetted", the temperature of the mixture can then be reduced to a level that will not cause a significant acceleration of the gel or cure reactions (typically, no more than 110 -120 F). At this time, the curing agent can be added and completely, and quickly, mixed in. The time required to do this step should, of course, be minimized so that the propellant will not cure prematurely in the mixer or in the cartridges or rocket engine into which the casting is done.

Also, if possible, it may be helpful to mix the curing agent into the propellant while under a vacuum. Ideally, it would be added somewhat slowly so that each little bit gets almost immediately and thoroughly mixed in. This prevents a large concentration of curing agent being found in any one place at any time, a factor which helps to keep binder resin from forming overcured bits of binder where the concentration was high and undercured bits where the concentration was low. If this cannot be done while under vacuum, it would still be helpful to gradually add the curing agent while mixing at atmospheric pressure.

The vacuum excludes air bubbles and the moisture that is in those air bubbles, which can react with the curing agent to form carbon dioxide bubbles. These bubbles cause the propellant to foam, thereby increasing the available burning area by an unknown amount. Since the chamber pressure is a sensitive function of the burning area, this increase in area can lead to explosion of the engine. In addition, a by-product is produced that accelerates the gelling of the propellant (if it is a polyurethane type) which can lead to premature curing in the mixing bowl. However, if a reproducible technique can be developed that produces about the same amount of bubbles each time, then the increase in burning area, if it is slight enough, can be compensated by making the nozzle diameter somewhat larger and the loss

of operating time before gelling starts to occur can be controlled to an acceptable degree. This is the technique that will be used in this course.

One word of caution, however, regarding how long mixing is allowed to progress. It has been reported by industrial companies in the past that extensive mixing of propellant can result in the abrasion and attrition of solid particles, especially oxidizer particles. The result is a slow, but steady, reduction in the average size of the particles with respect to time. Obviously, if carried to an extreme, this could result in changes in the ballistic properties of a propellant, such as burning rate, burning rate pressure exponent, etc. At the least, the performance would not match the designed performance. At the worst, burning rate might be raised so high that an explosion occurs. No specific data appears to be available, so the safe attitude to take would be to avoid hours of mixing at moderate to high speeds where it would be expected to see attrition of oxidizer particles due to excessive impact of the particles upon each other.

Vibration: Highly-solids-loaded liquids tend to not flow well. This can be a problem when filling a cartridge or engine. If the flow is too slow, gelling may occur before the propellant is completely dispensed. Also, even if the propellant flows reasonably well when there is a large amount of it, it may not flow quickly enough when it has to work its way around mandrels that may be used to form the port area of the grain. If port area formation is accomplished by drilling out the propellant, then this flow problem can pretty much be avoided. But, if flow around tight spaces is required, then help may be needed.

As it happens, vibration can help propellants to flow much more quickly than they otherwise would. A simple hand-operated massaging vibrator, available at many stores, is all that is needed to do the job. The vibrator is held in such a way that it is in physical contact with both the dispensing bowl and the cartridge or engine being filled. The vibration causes the bowl contents to flow smoothly and rapidly. At the same time, the vibration of the cartridge or engine causes the propellant that enters to flow smoothly around the casting core and around the bottom of the volume being filled. The result is both rapid filling and an absence of air pockets in the cast propellant which would otherwise be there when the stiff propellant folds over upon itself.

If possible, the cartridge or engine being filled should be tipped slightly so that the lowest point is where the propellant enters first. This helps to ensure that no 'dead air' pockets are produced and that all of the air is pushed out ahead of the advancing propellant mass. If propellant is packed into the cartridge or engine by hand, then vibration probably won't be of any help, nor will it be needed.

Chemical Additives: There also exist chemical additives which can be added to the propellant to cause significant lowering of viscosities. Three types of additives are known as silanes, titanates and zirconates. Particles dispersed in liquids seem to be unreactive and neutral to the naked eye. However, this is not the case. Each particle has electronic charges surrounding it, due to the nature of the particulate material itself and, sometimes, due to the layers of water attached to their surfaces. The charges on the particles tend to repel each other if they are of the same type. That is, positive charges repel positive charges and negative charges repel negative charges. The end result is that the particles in the liquid tend to take up more room than they otherwise would if they were able to crowd together. This tends to increase viscosity. So, one way to deal with this problem is to add a chemical that "neutralizes" these charges and allow the particles to get closer together, though not so closely as to interfere with each other.

Silanes, titanates and zirconates are the usual chemicals of choice. They are added in very small quantities (usually less than 2 % by weight of the particulate materials themselves):

enough to coat the surfaces of the particles but not enough to interfere with the curing process. Further, it may well be that there are several different kinds of particles in the propellant, each with its own type of charged surface. In this case, it is perfectly acceptable to mix different kinds of chemicals to match the surface conditions of each particulate type. The effect upon viscosity can be remarkable. Mixtures that initially appear to be completely unable to flow can become very fluid! Of course, if you couple this technique with the additional use of vibration, then even very highly-solids-loaded propellants can be made to flow very nicely. A good source of these chemicals is:

Kenrich Petrochemicals, Inc., 140 East 22nd Street, P. O. Box 32, Bayonne, N. J. 07002-0032(Tel.: (201)-823-9000).

This company also has a superb reference manual for the asking that will tell you anything you ever wanted to know about these chemicals. Also, keep in mind that you may very well want to make some other things out of plastics that contain various types of fillers and/or reinforcements: insulation, nozzle assemblies, fixtures, fins, nose cones, transition sections, etc., and these additives may be able to help you incorporate more fillers and/or reinforcements into these plastics for increased strength, heat resistance, impact resistance, etc.

Antifoam: If vacuum mixing is to be done, it is normal for the propellant to increase in volume several times its original volume due to the liberation of large quantities of dissolved gases normally present in almost all liquids at atmospheric pressure. It is very desirable to limit the increase of this volume in order not to overflow the mixing container and to keep bubbles out of the finished propellant. Even if hand mixing/packing is done, antifoam can help exclude air bubbles, so it is advisable to use it.

In order to do this, a VERY SMALL AMOUNT of a silicone antifoam compound (such as Dow Corning, Inc., DC-200 silicone oil) may be added. The normal range of concentration of this compound is from about 50 parts per million to 5000 parts per million (0.5 %). **TRY TO STAY AS CLOSE TO THE LOW END OF THIS RANGE AS POSSIBLE!** The reason is that, if too much silicone oil is added, it can have a bad effect on adhesion of the propellant to the solid ingredients as well as on the adhesion of the propellant to the inside of the cartridge or rocket engine into which it is being cast. Excess silicone oil acts as a mold release (parting agent) and is used in some plastics to ensure that molded plastic parts do not stick to the molds in which they are formed. So, use it VERY sparingly!

In addition to the use of antifoam, it has been found by experience to be EXTREMELY effective to be able to stir the propellant slowly while this bubble releasing process is going on. The stirring causes the bubbles produced to be broken down very quickly, whereas, if no stirring is done, it is not unusual for the foaming propellant to puff up and just sit there with almost no breaking of the foam bubbles. This is another reason why vacuum processing (with simultaneous stirring) is so desirable.

Viscosity Modifiers:

Decreasers: It has already been mentioned that silanes, titanates and zirconate compounds can be used to greatly reduce the viscosity of propellant mixes.

Increasers: In some instances, it may actually be desirable to INCREASE the viscosity of a propellant. This might be needed if a propellant having very low levels of solids is desired (e.g., gas generator propellants having less than 60-70% oxidizer contents). In these propellants, the level of solids is so low that settling may not only occur, it may be